GAS
AUDIO POWER

MAD USER MANUAL



MAD PM1

PM1-64, PM1-84

MADE TO PLAY LOUD

WE PLAY LOUD!!

We know what you want. You want it LOUD, and that is exactly what we do, what we live for. Vibrations, gut-punches and straight up loud music - that's what makes us tick. We won't dress up in fancy words or claim to be something we're not. We are the NO BULLSH!T car audio brand!

Every single product with the GAS logo on it is born out of passion, the same that has driven us for two generations and that will keep us rolling up to your neighbourhood, winning and pushing the limits for many generations to come!

It's up to you to choose your own level of loud, and if you don't like what we do that's OK. You are welcome back when you've had your first true GAS experience. We don't exclude, we don't judge and we do not make up any excuses for who we are.

We are GAS and we are proud to be LOUD!

GAS

TABLE OF CONTENT

SAFETY 3

UNPACKING 4

DIMENSIONS 4

SPECIFICATIONS 5
- MAD PM1-64 5
- MAD PM1-84 5

FEATURES 6
- Midrange madness 6
- Are you loud enough? 6
- Power of paper 6
- Doing it the SPL way 6

HOW TO 7
- Install speakers 7

TROUBLESHOOTING 9
- No power/sound 9
- Unwanted noise 9
- Distortion 9

WARRANTY & DISPOSAL 10

THE GAS WORLD 11

SAFETY

PLAY LOUD & SAFE. Read through this information, follow the instructions and save the manual for future usage and reference.

Make sure to pay attention to the instructions when you see this symbol: 

Do not expose the wiring to your new speaker to excessive damp or moisture. If the speaker's wiring is exposed it might result in electric failure, shock or damage to the product. Servicing is required when the product has been damaged in any way and/or doesn't operate normally. Refer all servicing to qualified service personnel only.

Keep the cables inside the vehicle separate from sharp edges or components that may be affected or take damage. Follow the recommended cable sizes and always use high quality cables and accessories. Even if you're eager to put the speakers to use – take no shortcuts when installing the cables, make sure that all connectors are protected and secured.

Do not drill any holes without checking what lies beneath, and don't cut anything without making sure that no important components risk being damaged.

There is a first time for everything, if you need help - ask a friend or contact your local GAS AUDIO POWER dealer/installer.

We want you to experience your product's MAD sound, but we don't want you to injure yourself or others. Use common sense, respect high pressure levels and volume, and follow your local laws and regulations.

UNPACKING

Unboxing your new MAD product is an experience, make sure that the speakers and all the accessories are included in the packaging:

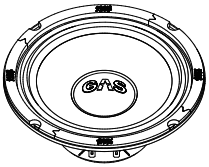

Speakers (2pcs)



Manual

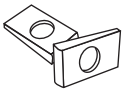

V-type clips (8pcs)



Screws (8pcs)

DIMENSIONS

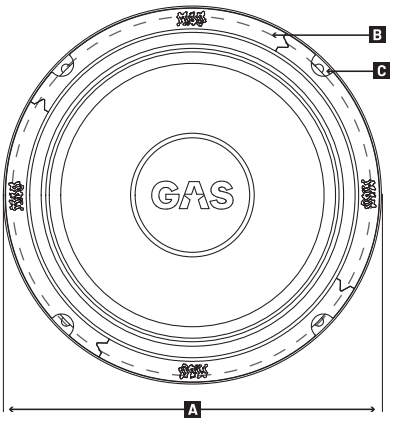

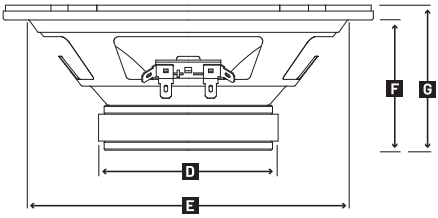

	A	B	C	D	E	F	G	
PM1-64	Ø165	Ø156	4.2	Ø80	Ø143	58	66	mm
PM1-84	Ø205	Ø195	5x7	Ø80	Ø185	70	79	mm

SPECIFICATIONS

Below you'll find the specifications that has been checked and tested in our workshop. The specified sensitivity isn't directly connected with the sound pressure in the vehicle, and shouldn't be used as the sole indicator for comparison with other speakers.

MAD PM1-64	
Component	SPL Midrange
Woofer size	6.5" (165mm)
Nominal impedance	4 Ohm
Power RMS	60W
Power MAX	120W
Freq. response	100-12 000Hz
Sensitivity	94dB
Voice Coil	1" KSV
Woofer cone	Reinforced pressed paper
Woofer basket	Steel
Woofer suspension	2R cloth surround
Woofer magnet	HQ Ferrite
Woofer spider	Polycotton
Vas	8.65 L
Qts	1.10
Qes	1.44
Qms	7.78
Re	3.63 Ohm
Fs	112.12Hz

MAD PM1-84	
Component	SPL Midrange
Woofer size	8" (200mm)
Nominal impedance	4 Ohm
Power RMS	70W
Power MAX	140W
Freq. response	90-10 000Hz
Sensitivity	93dB
Voice Coil	1" KSV
Woofer cone	Reinforced pressed paper
Woofer basket	Steel
Woofer suspension	2R cloth surround
Woofer magnet	HQ Ferrite
Woofer spider	Polycotton
Vas	12.25 L
Qts	1.25
Qes	1.50
Qms	7.55
Re	3.58 Ohm
Fs	88.80Hz

FEATURES

The MAD midrange speakers are made to be LOUD and last for years to come. We want to help you and your vehicle to be as LOUD as possible. We've made sure that is the case by using innovative and groundbreaking techniques that increase durability.

MIDRANGE MADNESS

The MAD PM1 midrange drivers are here to stay and to play LOUD. It's time to take a stand, and it's your choice. Are you going to be "that guy" who stays on the sidelines, or are you going to show everyone how LOUD you can be? If you're ready to take the first step into the wonderful world of SPL, you have the right product.

ARE YOU LOUD ENOUGH?

SPL is not just a couple of midrange drivers and horn tweeters that will wake up the neighbors in the next area, SPL is a lifestyle! But beware, as soon as you have installed your first pair you will want to add two more and two more after that, and that's OK. The SPL addiction is a way of life, and believe us, your car was made to play LOUD.

POWER OF PAPER

We're referring to the pressed paper cone, of course. The MAD PM1-64 is made for playing your favorite music, as loud as possible. When testing this midrange driver, we noticed one thing: for that extra durability, the paper cone needed to be reinforced. Now you're ready to crank that volume knob as hard as you can. We know you want to.

DOING IT THE SPL WAY

You can do better than two speakers. Come on! More is always better, and we want you to be as LOUD as you possibly can. To make this easier, we've placed two gold plated terminals on the speaker. This makes it easier to add a speaker to your setup, or a tweeter. The choice is yours, but be sure to make a kickass build that'll make GAS proud.

HOW TO

INSTALL SPEAKERS

Before installing your brand new speakers, make sure that you have everything you need. Have the right tools ready, and make sure that you have the necessary knowledge/skill to perform the installation properly. Preparation and knowledge is crucial!

The MAD PM1 series uses a single 4 Ohm voice coil. If you want to connect four or more X1 series speakers, you can vary the impedance by altering the wiring configuration to use a series or parallel setup. The more the merrier!

Make sure to look through the recommended wiring schematics below and choose the setup that corresponds with the number of speakers in your sound system. Take note of the impedance stability of your amplifier. Don't be afraid to consult your local GAS AUDIO POWER dealer/installer if you have any questions.

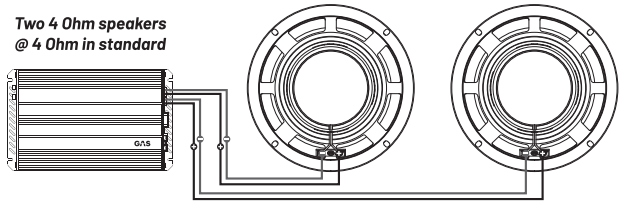

It is important to know the limits of your amplifier. Be sure to connect your sound system with a suitable impedance to optimize your sound system.

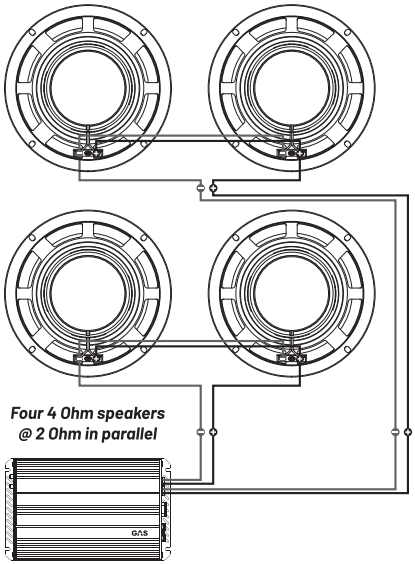

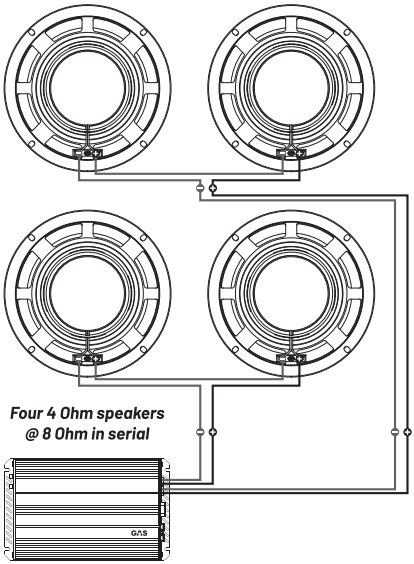

HOW TO

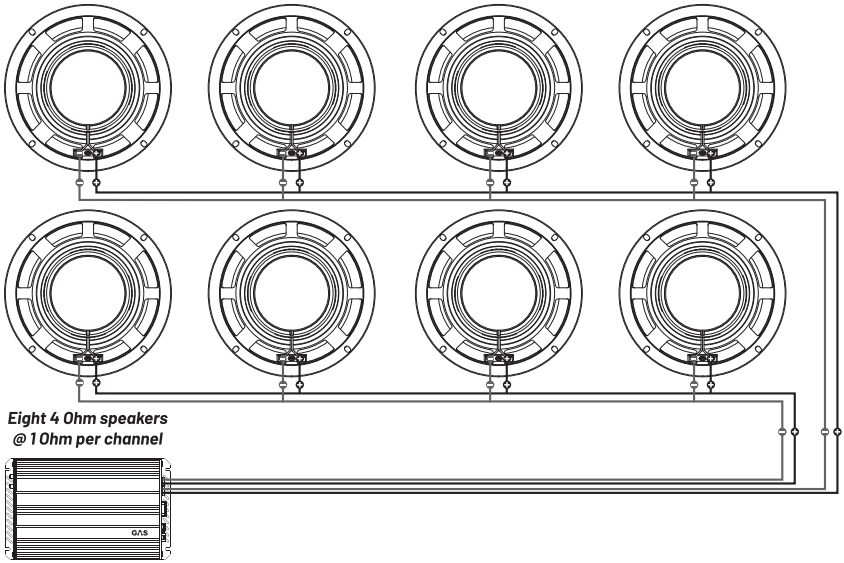

Eight 4 Ohm speakers
@ 1 Ohm per channel

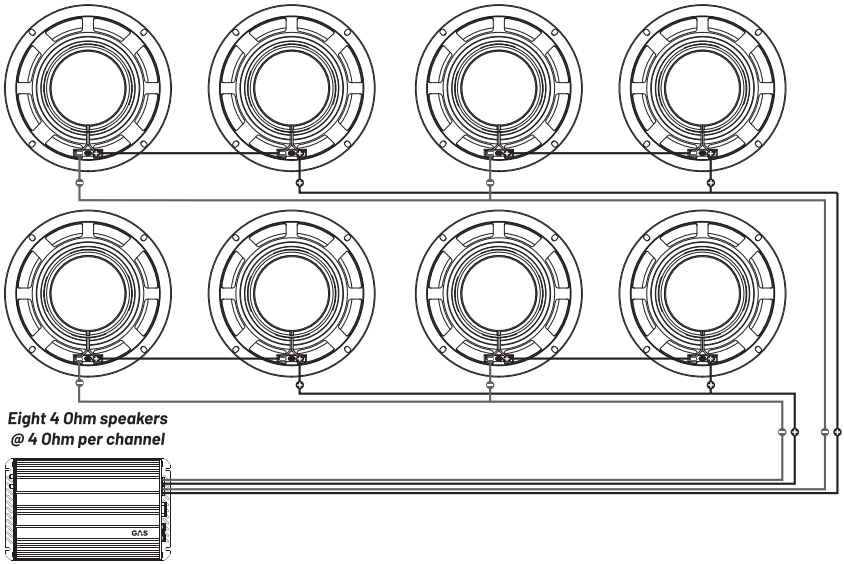

Eight 4 Ohm speakers
@ 4 Ohm per channel

TROUBLESHOOTING

NO POWER/SOUND

Check the speakers to make sure they're not damaged. If your speakers don't get any power, the most common issue is either in the wiring or in the amplifier. Use a multimeter to measure the amplifier's voltage on the +12V terminal and the remote signal terminal. Use a multimeter to make sure that you have a negative ground connection. Check the built-in fuse (if there's one) on the amplifier. If there's no power coming through - control the fuse on the power cable. If it's intact - make a full check of the wiring to ensure cable integrity.

Check all the speakers connected to your sound system. Check all the speaker cables and all the signal cables. Check your head unit to make sure no settings are limiting the amplifier's functions or the speakers. When all of the above has been tested/looked over, and all is as it should be but there's still no sound, consult your local GAS AUDIO POWER dealer/installer.

UNWANTED NOISE

Start by looking over the speakers in the sound system so there is no damage or connection issue with the wiring. Make sure that your signal cables or speaker cables aren't too close to the power cables. Check your amplifier's grounding point and make sure that the surface is clean. When all of the above has been tested/looked over, and the unwanted noise does not vanish, consult your local GAS AUDIO POWER dealer/installer.

DISTORTION

Start by looking over the speakers in the sound system so there's no damage or connection issue with the wiring. Check the speaker cables to make sure that the polarity isn't reversed on one channel. Check the settings on the amplifier, make sure that the gain/level is set according to the amplifier's instructions. If your amplifier has a boost function, lower its effect or turn it off.



WARRANTY & DISPOSAL

This product is covered by warranty, depending on the conditions in the country where it's sold. If the speaker is returned for service, please include the original dated receipt (or a copy) with the product. Make sure that the head unit is packaged properly and secured, preferably in its original packaging.



The crossed-out wheelie bin symbol means that the product, literature and packaging included must be taken to separate collection at the end of their working life. Don't dispose of these products as unsorted municipal waste: take them for recycling. For info on your nearest recycling point, check with your local waste authority.



This product has been granted with the CE certification mark to show that the product follows the health, safety, and environmental protection standards for products sold within the European Economic Area (EEA).



GAS Audio Power products comply with the relevant provisions of the RoHS Directive for the European Union. In common with all Electrical and Electronic Equipment (EEE) the product shouldn't be disposed of as household waste. Alternative arrangements may apply in other jurisdictions.



GAS Audio Power is a global partner of the European Mobile Media Association, an organization that focus on promoting the custom made mobile media installations to consumers.

THE GAS WORLD

You've entered the world of GAS. We aim to please, and we've made sure to have products made for you. No matter what stage of the LOUD-addiction you might find yourself in, there is a GAS product to fill your need.

MAD

Just starting out? The MAD series is made to play LOUD and to be the express lane to a no bullsh!t sound system that will make sure everyone can hear you coming!

MAX

The MAX series holds products made to deserve the center stage. Powerful, heavy duty and designed to be noticed. We made NO COMPROMISES because we know that you wouldn't accept it.

CMP

The CMP series has been developed for the crucial seconds when the dB-counter starts to tick. All CMP products have hand-picked, high quality, COMPETITION GRADE components and they are specially designed to withstand an awesome amount of power.

THANKS FOR JOINING GAS AUDIO POWER!



GAS AUDIO POWER

GAS AUDIO POWER and SHAKY are registered trademarks by Winn Scandinavia AB and is protected by relevant laws and jurisdictions such as Copyright and Trademark laws.

Winn Scandinavia AB | Elementvägen 15, 70227 Örebro, Sweden | www.winnscandinavia.com

Winn Scandinavia AB reserves for possible typos, factual or numeric errors that may have been printed on any products, package designs, user manuals and/or other included accessories.

Winn Scandinavia AB can't guarantee flawless function/performance of our products together with third-party accessories and products like USB data carriers, MicroSD cards, cables, etc.





GAS

AUDIO POWER